# LUMITHREE

# PT-1089 Pendant

Product Specifications

## ORDERING CODE

PT-1089 - _____ - _____ - _____ - _____ - _____

| Product ID | Dimension | Voltage | OAH | Dome Finish | Ring Finish |
|---|---|---|---|---|---|
| **PT-1089** | **OS -** 12" W x 12" H<br>**C -** Custom *<br>*Consult factory,<br>Minimum Quantity Required | **120 -** 120V<br>**277 -** 277V | **36 -** 36" OAH<br>**48 -** 48" OAH<br>**60 -** 60" OAH<br>**C -** Custom*<br>*Consult factory | **NB -** Navy Blue Painted<br>**MW -** Matt White Painted<br>**MB -** Matt Black Painted<br>**SG -** Space Grey Painted<br>**C -** Custom*<br>*Consult factory, | **BR -** Brass Plated Finish<br>**CP -** Copper Plated Finish<br>**MB -** Matt Black Painted<br>**SG -** Space Grey Painted<br>**C -** Custom*<br>*Consult factory, |

## LIGHTING SPECIFICATIONS

1 x G9 Halogen Base Socket

Light Bulbs Not Included

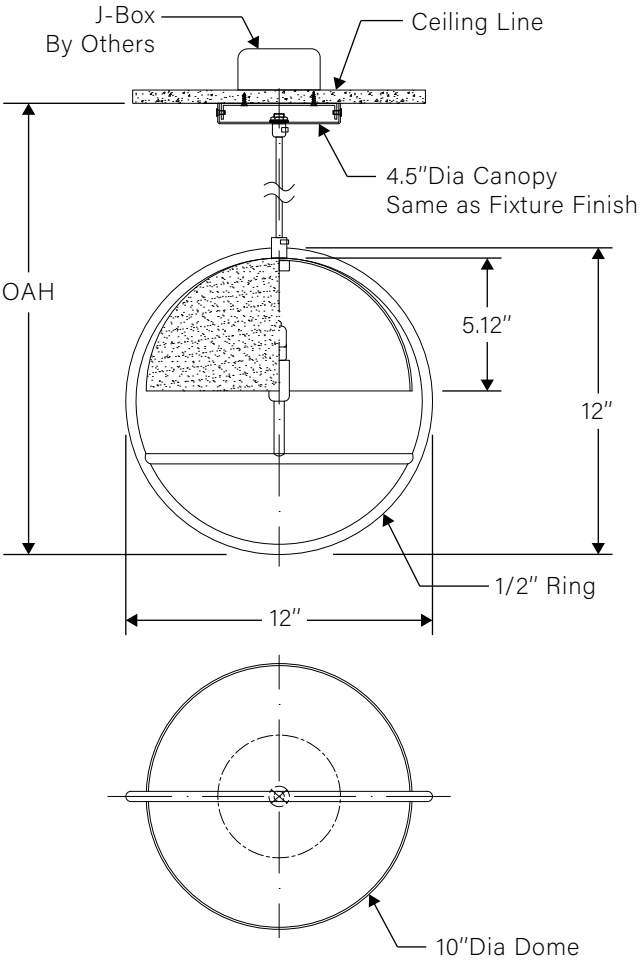


* Not to Scale.







APPROVED BY: _____ SIGNATURE: _____ DATE: _____




**LUMITHREE** | WWW.LUMITHREE.COM | 1.800.455.5316 | 514.334.2045 | 514.334.1355



Lumithree Inc. reserves the right to change or modify product specifications without notice.

c UL us LISTED